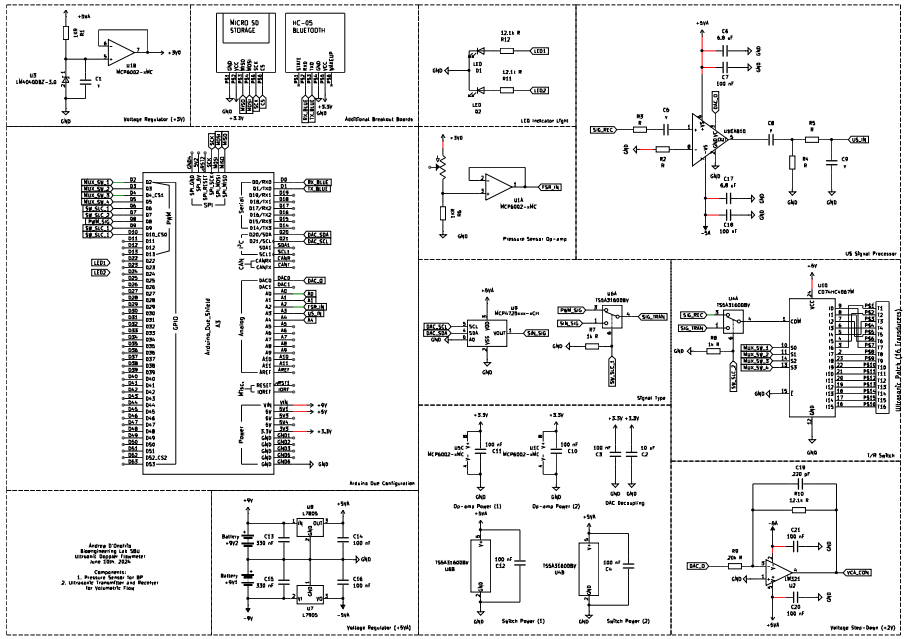
Voltage Regulator (+3V)
MICRO SD STORAGE
HC-05 BLUETOOTH
Additional Breakout Boards
LED Indicator Light
Pressure Sensor Op-amp
US Signal Processor
Arduino Due Configuration
Signal Type
1/0 Switch
Op-amp Power (1)
Op-amp Power (2)
DAC Decoupling
Switch Power (1)
Switch Power (2)
Voltage Step-Down (+2V)
Voltage Regulator (+9V)
Andrew D'Onofrio
Bioengineering L41 SDSU
Ultrasonic Doppler Tachometer
June 10th, 2024
Components:
1. Pressure Sensor for BP
2. Ultrasonic Transmitter and Receiver
for Volumetric Flow